INSTALLATION AND OPERATING MANUAL

EN

NETYS RT

1 - 3 kVA UPS

Socomec Resource Center
To download, brochures, catalogues
and technical manuals

socomec
Innovative Power Solutions

Download last release of installation and operating manual from:

AR	LT
CS	NL
DE	PL
EN	PT
ES	RO
FI	RU
FR	SL
HU	TR
IT	ZH

https://qr2.socomec.com/ressource-center

The safety information in this manual should be retained for future reference.

The reference information on safety is in English.

For other languages please contact Socomec or your local distributor.

The manufacturer will not be held liable for failure to follow the instructions in this manual which is also available at www.socomec.com

WARRANTY CERTIFICATE AND CONDITIONS

This Socomec appliance is guaranteed against manufacturing and material defects for a period of 12 months from the date of purchase (local warranty conditions are applicable in addition to the general conditions). This warranty certificate should NOT be e-mailed, but kept by the customer along with proof of purchase, for use in the event of a claim being made for repairs or replacement under warranty.

The warranty period commences on the date the new product was purchased by the end user at an authorised showroom (reference details are shown on the receipt).

Return-to-base warranty is provided: components and labour for repairs supplied free of charge, any products to be replaced must be returned to Socomec or authorised service centres, at the customer's own risk and expense.

The warranty is recognised within national territory. If the UPS is exported out of national territory, the warranty shall be limited to the cover of the parts used to repair the defect.

To claim service under the warranty please observe the following:

- The product must be returned in the original packing. Any damage caused during shipping in packaging other than the original will not be covered by the warranty;
- The product must be accompanied by proof of purchase such as an invoice or receipt indicating the date of purchase and product ID information (model, serial numer). The sender must also attach the reference number issued to authorise the return of the product, together with a detailed description of the defect. If any of this information is missing the warranty will be invalid. The authorisation number is issued by service centres over the telephone on receiving information on the defect in question;
- If it is not possible to provide proof of purchase the serial number and date of manufacture will be used to calculate the probable expiry date of the warranty; this could result in a reduction of the original warranty period.

The warranty on the product does not cover damage caused by carelessness (improper use: wrong input power, explosions, excessive humidity, temperature, poor ventilation, etc.), tampering or any unauthorised repair work.

During the warranty period, Socomec reserves the right to decide whether the product should be repaired, or whether to replace defective parts with new parts, or used parts that are equivalent to new parts in terms of functionality and performance.

In the case of batteries, the warranty is valid only if the battery has been recharged regularly in accordance with the manufacturer's instructions. On purchasing the product it is advisable to check that the next recharge date indicated on the packaging has not expired.

VRLA Battery

- Batteries are treated as consumable parts and the warranty only covers manufacturing defects.
- Batteries must be stored in compliance with the supplier's recommendations.
- The warranty is valid only if the battery has been recharged regularly in accordance with the manufacturer's instructions. On purchasing the product it is advisable to check that the next recharge date indicated on the packaging has not expired.

Prior to use, the end user should take care to determine whether the environment and the load characteristics are suitable, adequate or safe for the installation and the usage of this product. The User Manual must be carefully followed. The vendor makes no representation or warranty as to the suitability or fitness of this product for any specific application.

Options

A 12-month return-to-base warranty is provided as an option.

Software products

Software products are guaranteed for 90 days. The software is guaranteed to work as indicated in the manual accompanying the product. Hardware media or accessories (e.g. diskettes, cables, etc.) used with appliances are guaranteed free of material or manufacturing defects under normal conditions of use for a period of 12 months from the date of purchase.

Socomec will not be responsible for damages (including loss of income, interruption of business activity, loss of information or other financial losses, of any nature) arising from the use of the product.

These conditions are subject to Italian law. Disputes shall come under the jurisdiction of the Court of Vicenza.

Socomec retains the full and exclusive ownership rights over this document. Only a personal right to use the document for the application indicated by Socomec is granted to the recipient of such document. All reproduction, modification or dissemination of this document whether in part or whole and by any manner are expressly prohibited except upon Socomec's express prior written consent.

This document is not a specification. Socomec reserves the right to make any changes to data without prior notice.

EN CONTENTS

1. SAFETY INSTRUCTIONS 8
Special symbols 8
Safety of persons 9
Product safety 12
Special precautions 12

2. INTRODUCTION 13
2.1. Product features 13
2.2. Environmental protection 14
2.3. Recycling 15

3. PRODUCT OVERVIEW 16
3.1. Model name composition 16
3.2. Weight and dimensions 17
3.3. Rear panels 18
3.4. LCD panel 19
3.5. LCD description 21
3.6. Display functions 22
3.7. User settings 23

4. COMMUNICATION 24
4.1. RS232 and USB 24
4.2. UPS remote control functions 24
4.3. WEB/SNMP card or Box (Option) 25
4.4. Programmable Relay I/O card (Option NRT4-OP-ADC) 25

5. INSTALLATION 26
5.1. Inspecting the equipment 26
5.2. Checking the accessory kit 26
5.3. Installing the unit 27
5.4. Connecting the EBM(s) 30
5.4.1. Connecting to standard EBM 30
5.4.2. Connecting to other EBM 30

6. OPERATION 31
6.1. Starting the UPS using mains power 31
6.2. Starting the UPS using battery power 31
6.3. UPS shutdown 32
6.4. Operating mode 32

7. UPS MAINTENANCE 33
7.1. Equipment care 33
7.2. Transporting the UPS 33
7.3. Storing the equipment 33
7.4. Replacing batteries 34

8. TROUBLESHOOTING 35
8.1. Typical alarms and faults 35

9. SPECIFICATIONS 36
9.1. UPS block diagram 36
9.2. UPS specifications 37

1. SAFETY INSTRUCTIONS

SAVE THESE INSTRUCTIONS. This manual contains important instructions that should be followed during installation and maintenance of the UPS and batteries.

UPS Rack/Tower models are considered acceptable for use in ambient temperatures of 0°C ~ 40°C.

Special symbols

	RISK OF ELECTRIC SHOCK - Observe the warning associated with the risk of electric shock symbol.
	Important instructions that must always be followed.
Pb	EU separate collection and lead content mark for lead acid batteries. Indicates that the battery must not be disposed of in normal household waste but be separately collected and recycled.
	EU separate collection mark for waste electrical and electronic equipment (WEEE). Indicates that the item must not be disposed of in normal household waste but be separately collected and recycled.
20	Environmental Protection Use Period (EPUP).
	Information, advice, assistance.
	Refer to the user manual.

Safety of persons

- This manual should be kept in a safe place near the UPS so that it can be consulted by the operator at any time for information that may be needed regarding correct use of the unit. Read the manual carefully before connecting the unit to the a.c. mains supply and the downstream appliances. Before the UPS is put into use the user should be completely familiar with its operation, the position of all the controls and the technical and functional characteristics of the unit, so as to ensure there will be no risk to persons or the appliance itself.
- Before being started, the unit must be equipotentially bonded, in accordance with current safety regulations. The earth wire of the UPS must then be connected to an efficient earth system.
- If there is no earth connection, the appliances connected to the UPS will not be equipotentially bonded. In this situation, the manufacturer declines all liability for any damage or accidents that could result from failure to observe the requirements.
- Should a power outage occur (UPS in stand-alone mode), do not disconnect the power cord from the mains, as this will break the earth connection to bonded appliances.
- All subsequent maintenance operations must only be performed by authorised service engineers. The UPS generates high internal voltages that could be hazardous for a maintenance operative not in possession of the appropriate skills and training for this type of work.
- If a hazardous situation should arise at any time when the UPS is in use, isolate the unit from the power supply (by operating a switch at the upstream PDU if possible) and switch the appliance off completely by running the shutdown procedure.
- The UPS houses a source of electrical energy, i.e. its batteries. The output of the UPS may be powered even when the appliance is not connected to the a.c. mains supply.
- If the appliance is to be disposed of it should only be entrusted to a specialist waste disposal company. These companies will dismantle and dispose of the various components in accordance with statutory regulations in the country of purchase.
- Use the UPS in accordance with the technical specifications indicated in this manual.
- Skilled person is required for the installation.

- Avoid exposing the UPS to contact with water or any liquids generally. Do not insert foreign objects into the cabinet.
- The product you have selected, given the specified conditions of use, capacity and performance limits, is designed exclusively for commercial and industrial operation. Using the product in critical applications could require compliance with statutory regulations and standards, specific local bylaws, or adaptation to SOCOMEC recommendations. For this type of use it is always advisable to contact SOCOMEC beforehand for confirmation regarding the capacity of products to meet required levels of safety, performance and reliability. Critical applications include, in particular, life support systems, medical applications, commercial transport, nuclear facilities or any other systems where failure of the product might on occasion cause serious damage to persons or property.

NOTE!
These are products for commercial and industrial application – installation restrictions or additional measures may be needed to prevent disturbances.

CAUTION IF DAMAGED
NON-SPILLABLE BATTERIES

Torn, crushed or damaged packaging which exposes the contents should be set aside in an isolated area and inspected by a qualified person. If the package cannot be shipped the contents must be promptly collected, segregated, and either the sender or recipient contacted.

- Since the UPS power cord functions as an isolating device, ensure ready access to the mains power socket where the UPS is connected, and/or the rear panel of the UPS, so the unit can be easily unplugged.
- The UPS generates a leakage current of approximately 3 mA. To guarantee the maximum leakage current of 3.5 mA, ensure the leakage current generated by the load is no greater than 0.5 mA. Should the leakage current from the load exceed this limit, instruct a skilled engineer to install an industrial type connection (to IEC 309 standard) between the UPS and the a.c. mains supply, sized to handle a current compatible with the rating of the appliance.

- The battery supplied with the system contains small amounts of toxic materials. To avoid accidents, the directives listed below must be observed:
  - Servicing of batteries should be performed or supervised by personnel knowledgeable about batteries and the required precautions.
  - When replacing batteries, replace with the same type and number of batteries or battery packs. Instructions shall carry sufficient information to enable the replacement of the battery with a suitable recommended type.
  - **CAUTION!** – Do not dispose of batteries in a fire. The batteries may explode. Dispose of used batteries according to the instructions.
  - Never force, break or attempt to open the batteries. These batteries are sealed, maintenance-free components containing substances that are harmful to health and a source of environmental pollution. If liquid can be seen leaking from the battery, or a white powdery residue is noticeable, do not switch the UPS on.
  - Replaced batteries must be disposed of at authorised waste disposal centres. It is very dangerous to touch any part of the batteries as there is no insulation between the batteries and the mains power source.

CAUTION!

- A battery can present a risk of electrical shock and high short circuit current. The following precautions should be observed when working on batteries:
  - Remove watches, rings, or other metal objects.
  - Use tools with insulated handles.
  - Wear rubber gloves and boots.
  - Do not lay tools or metal parts on top of batteries.
  - Disconnect any charging sources prior to connecting or disconnecting battery terminals.
  - Check if the battery has been inadvertently grounded. If inadvertently grounded, remove the source from the ground. Contact with any part of a grounded battery can result in electrical shock. The likelihood of such shock can be reduced if such grounds are removed during installation and maintenance.
  - Do not open or mutilate batteries. Released electrolyte is harmful to the skin and eyes. It may be toxic.
  - Failed batteries can reach temperatures that exceed the burn thresholds for touchable.

Product safety

- UPS enclosure IP rating IP20.
- The upstream circuit breaker for Normal AC/Bypass AC must be easily accessible.
- The socket-outlet should be installed near the equipment and should be easily accessible.
- Check that the indications on the rating plate correspond to your AC powered system and to the actual electrical consumption of all the equipment to be connected to the system.
- Never install the system near liquids or in an excessively damp environment.
- Never allow a foreign body to penetrate the system.
- Never block the ventilation grates of the system.
- Never expose the system to direct sunlight or source of heat.
- If the system must be stored prior to installation, storage must be in a dry place.
- The admissible storage temperature range is -25°C to +55°C without batteries, 0°C to +40°C with batteries.
- This UPS can be used in TN/IT/TT power systems.

Special precautions

- The unit is heavy: wear safety shoes and preferably use a vacuum lifter for handling operations.
- All handling operations will require at least two people (unpacking, lifting, installation in a rack system).
- Before and after the installation, if the UPS remains de-energised for a long period, the UPS must be energised until the batteries are fully charged (see Battery Status on LCD). At least once every 6 months (for a normal storage temperature under 25°C). This charges the battery, thus avoiding possible irreversible damage.
- During the replacement of the Battery Module, it is imperative to use the same type and number of elements as the original Battery Module provided with the UPS to maintain an identical level of performance and safety.

Note: this is a category C2 UPS product. In a residential environment, this product may cause radio interference, in which case the user may be required to take additional measures.

2. INTRODUCTION

We recommend that you take the time to read this manual to take full advantage of the many features of the UPS.

Before installing your UPS, please read the booklet presenting the safety instructions. Then follow the indications in this manual.

The UPS settings can be protected by a user password: we kindly suggest to change it at the first UPS power up.

2.1. Product features

The UPS protects your sensitive electronic equipment from the most common power problems, including power failures, power sags, power surges, brownouts, line noise, high voltage spikes, frequency variations, switching transients, and harmonic distortion.

Special characteristics:

- Double converter with pure sine waveform output.
- Full digital control.
- Output PF = 1.
- Wider input voltage range: 110 Vac~300 Vac.
- Higher charger current for long backup mode: 8A, adjustable from 2 A to 8 A via the LCD display.
- EBM quantity auto detection.
- Communication ports: RPO, Dry in, Dry out, intelligent slot, USB, RS232.
- Dot-matrix LCD, in multi-languages.
- ECO Mode.
- Battery-free start(1).

(1) the first restart shall be performed with AC supply

2.2. Environmental protection

Products are developed according to an eco-design approach.

Substances

This product does not contain CFCs, HCFCs or asbestos.

Packing

To improve waste treatment and facilitate recycling, separate the various packing components.

- The cardboard we use comprises over 50% of recycled cardboard.
- Sacks and bags are made of polyethylene.
- Packing materials are recyclable.

Follow all local regulations for the disposal of packing materials.

Product

The product is mainly made up of recyclable materials.

Dismantling and disassembly must take place in compliance with all local regulations concerning waste. At the end of its service life, the product must be transported to recycling centers, re-use and treatment facilities for waste electrical and electronic equipment (WEEE).

Battery

The product contains lead-acid batteries that must be processed according to applicable local regulations concerning batteries.

The battery may be removed to comply with regulations and in view of correct disposal.

2.3. Recycling

Contact your local recycling or hazardous waste centre for information on proper disposal of the used equipment.

Do not dispose of the batteries in a fire. This may cause battery explosion. The batteries must be correctly disposed of according to local regulations.

Do not open or destroy the batteries. Escaping electrolyte can cause injury to the skin and eyes. It may be toxic.

Pb

Do not dispose of batteries in the trash.

This product contains sealed lead acid batteries and must be disposed of correctly as explained in this manual. For more information, contact your local recycling centres, re-use and treatment facilities.

The crossed-out wheeled bin symbol indicates that waste electrical and electronic equipment should not be discarded together with unseparated household waste but must be collected separately. The product should be handed in for recycling in accordance with the local environmental regulations for waste disposal.

By separating waste electrical and electronic equipment, you will help reduce the volume of waste sent for incineration or land-fills and minimise any potential negative impact on human health and environment.

3. PRODUCT OVERVIEW

3.1. Model name composition

UPS model name composition: NRT4-U | SSS | CCCC

NRT4-U	SSS	CCCC
Model name - prefix	Size	Configuration
	010 = 1 kVA	B = internal battery, normal life
	015 = 1,5 kVA	B-C = internal battery + electronic cards coated
	020 = 2 kVA	B-L = internal battery, long life
	030 = 3 kVA	LB = long backup time (enhanced battery charger), without internal battery
		LB–C = same as LB, but + electronic cards coated
		B-ES= internal battery (for CEI 016 standard)

Note: in the following pages the specifications are referenced to multiple product configurations in this way:

NRT4-USSS.. stands for UPS SSS size, any configurations.

NRT4-USSSB.. stands for UPS SSS size, configuration B, B-C, B-L, B-ES

NRT4-USSSLB.. stands for UPS SSS size, configuration LB and LB-C

EBM model name composition: NRT4-B | SSS | CC

NRT4-B	SSS	CC
Model name - prefix	Size	Configuration
	015 = 36 V	(nothing) = Normal life battery
	030 = 72 V	-L = long life battery
		-0 = empty cabinet

Note: in the following pages the specifications are referenced to multiple product configurations in this way:

NRT4-BSSS... stands for EBM SSS size, any configurations.

The models are not available for all markets. Contact Socomec for more information.

3.2. Weight and dimensions

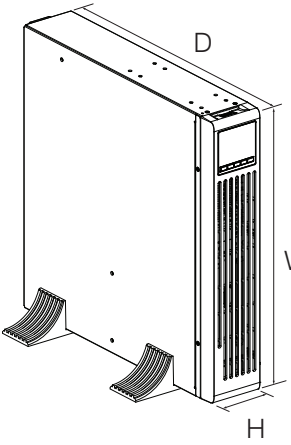

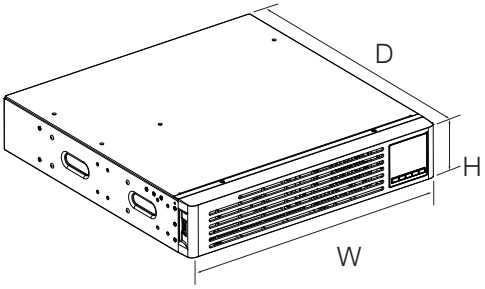

MODEL NAME	DESCRIPTION	NET WEIGHT (kg)	DIMENSIONS (mm) W x D x H
NRT4-U010B…	NETYS RT 1000VA VFI UPS 1/1 PF=1 WITH BATTERY INTEGRATED +RAILS	15.5	438 x 445 x 85.5
NRT4-U015B…	NETYS RT 1500VA VFI UPS 1/1 PF=1 WITH BATTERY INTEGRATED +RAILS	15.7	
NRT4-U020B…	NETYS RT 2000VA VFI UPS 1/1 PF=1 WITH BATTERY INTEGRATED +RAILS	25.6	438 x 600 x 85.5
NRT4-U030B…	NETYS RT 3000VA VFI UPS 1/1 PF=1 WITH BATTERY INTEGRATED +RAILS	26.1	
NRT4-U015LB…	NETYS RT 1500VA VFI UPS 1/1 PF=1 WITH POWERFUL CHARGER FOR EXTERNAL LONG AUTONOMY BATTERY + RAILS	8.2	438 x 445 x 85.5
NRT4-U030LB…	NETYS RT 3000VA VFI UPS 1/1 PF=1 WITH POWERFUL CHARGER FOR EXTERNAL LONG AUTONOMY BATTERY + RAILS	10.9	438 x 600 x 85.5
NRT4-B015…	NETYS RT BATTERY CABINET FOR 1000VA AND 1500VA UPS	22.3	438 x 445 x 85.5
NRT4-B030…	NETYS RT BATTERY CABINET FOR 2000VA AND 3000VA UPS	39.8	438 x 600 x 85.5

Note: the weights in this table are for reference only, please see the labels on the carton for details.

3.3. Rear panels

- IEC

NRT4-U010B.. / NRT4-U015B.. / NRT4-U015LB..

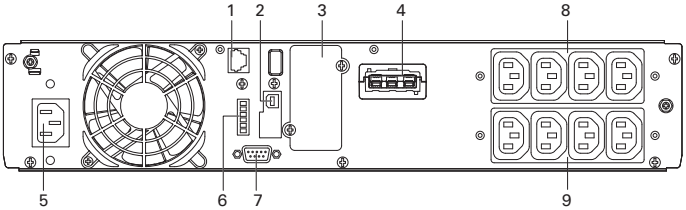

NRT4-U020B..

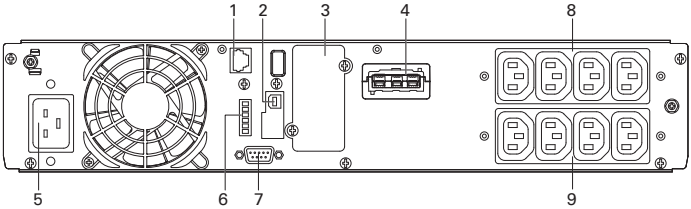

NRT4-U030B.. / NRT4-U030LB..

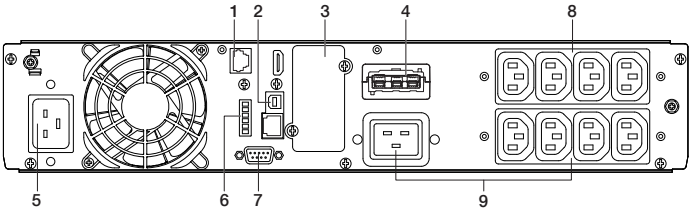

NRT4-B015.. / NRT4-B030..

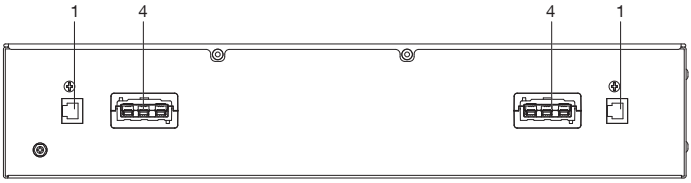

1. EBM auto detection
2. USB
3. Smart card box
4. EBM Connector
5. Input Socket
6. RPO/Dry in/Dry out
7. RS232
8. Programmable Output Socket
9. Output Socket

3.4. LCD panel

The UPS has a five-button graphical LCD. It provides useful information about the UPS itself, load status, events, measurements and settings.

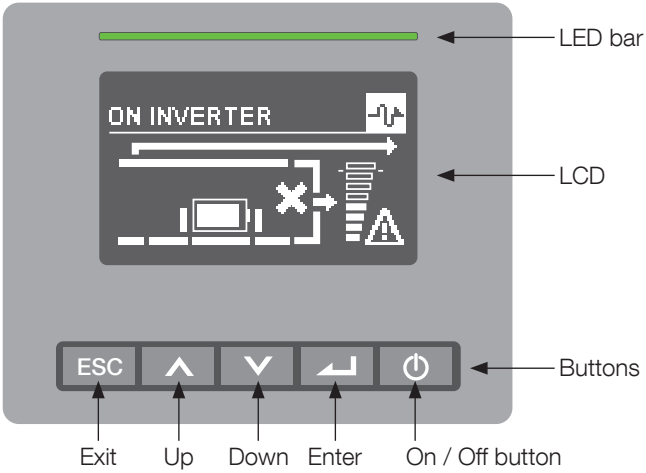

The following table shows the LED bar status and description:

LED BAR	COLOR	GENERAL MEANING
	Off	Load not supplied on standby/off etc.
	Green	Load protected by inverter
	Green/off	Load supplied and UPS self-tested. (for example, when battery test is in progress)
	Green/Yellow	Load supplied and preventive alarm present
	Yellow	Load supplied with warning
	Yellow/Off	Maintain request/in progress
	Yellow/Red	Load supplied, but no longer protected
	Red	Load not supplied due to alarm
	Red/Off	Load not supplied, but the output will stop in a few minutes
	Yellow/Red/ green	No communication

The following table shows the Buttons status and description:

BUTTONS	FUNCTION	DESCRIPTION
	Power on	The Unit can be powered on by pressing the button for more than 100 milliseconds and less than 1 second, without utility input and battery connected
	Turn on	Press the button more than 1 second to turn on the UPS
	Turn off	Press the button more than 3 seoconds to turn off the UPS
	Scroll up	Press to scroll up the menu option
	Scroll down	Press to scroll down the menu option
	Enter menu	Select/Confirm the current selection
ESC	Exit the present menu	Press to exit present menu to main menu or the higher-level menu without changing the setting
	Mute buzzer	Press the button to mute the buzzer temporarily; once a new warning or fault is active, the buzzer will be activated again

The following table shows the buzzer status and description:

THE BUZZER	GENERAL MEANING
1 beep/ 2 minutes	Load supplied on bypass
1 beep/ 4 seconds	Load supplied on battery
1 beep/ 1 second	Alarming
1 beep/ 0.5 seconds	Overload warning
Continuous beeping	A fault has occurred

3.5. LCD description

The LCD backlight automatically dims after 10 minutes of inactivity. Press any button to restore the screen.

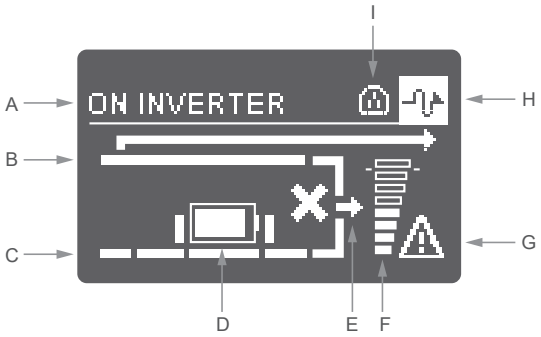

AREA	DESCRIPTION	DESCRIPTION	
A	UPS status	On mnt. BP, Im. STOP, On battery, Battery test, On Inverter, Eco mode, On bypass, Standby, OFF	
B	Bypass input	On: Bypass input ok Off: Bypass input NOT ok	
C	Main input	On: Main input ok Off: Main input NOT ok	
D	Battery status	Symbol	On: Battery ok Off: No battery Flashing: Battery alarm
		Status	Battery open Battery discharging Battery charging
		Capacity	1 vertical line for 5% % value for charging, backup time for discharging
E	Output	On: on inverter or on bypass Off: no output	
F	Load status	8 steps for 0%-100% load Top bar flashing: UPS is overloaded	
G	Alarm icon	On: general alarm Off: no alarm	
H	Mode icon	Eco mode Standby mode No icon, normal mode	
I	Power share icon	On: Power share output is supplied Off: Power share output is not supplied	

3.6. Display functions

MAIN MENU	SUBMENU	DISPLAY INFORMATION OR MENU FUNCTION
UPS MODE		UPS mode, date/time, battery status and current alarms
HISTORY		Displays the events and faults stored
MEASUREMENTS		[Load] W VA A P%, [Input/Output] V Hz, [Battery] % min V Ah, [DC Bus] V, [Ambient temperature] °C
COMMANDS	Go to Bypass	Transfers the UPS on Bypass mode
	Load segment	Load segment on/off
	Start battery test	Starts a manual battery test
	Reset fault state	Clear active fault
	Reset history	Clear events and faults
	Restore factory set	Restore to default factory settings
PARAMETERS		Refer to chapter 3.6 User settings
SERVICE		[Product name], [Serial number], [firmware version]

3.7. User settings

The following table displays the options that can be changed by the user.

SUBMENU	AVAILABLE SETTINGS	DEFAULT SETTINGS
Password	Can be changed by user	4732
Language	English, Français, Deutsch, Español, Русский, Português, Italiano, Svenska, Polski, Magyar, 简体中文	English
User Password	[enable, *****], [disable]	enabled
Audible alarm	[enabled], [disabled]	enabled
Output voltage	[200V], [208V], [220V], [230V], [240V]	[230V]
Output frequency	In normal mode: [autosensing] In converter mode: [50Hz], [60Hz]	autosensing
High efficiency mode	[disabled], [enabled]	disabled
Load Segment	Auto start delay: [no delay, 1-99998s] Auto shoutdown delay: [disable, 0-99998s]	no delay disable
Start/Restart	Cold start: [disabled], [enabled] Auto restart: [disabled], [enabled] Start on bypass: [disabled], [enabled]	enabled enabled disabled
Site wiring fault (1)	[enabled], [disabled]	disabled
Overload pre-alarm	[50%~105%]	105%
External battery	Standard models: [Auto detection], [Manual Ah: 7~144Ah] Long backup time models (LB): [Auto NL detection], [Auto LL detection], [Manual Ah: 7~144Ah]	Auto NL detection 0 Ah
Charger current	[2A], [4A], [6A], [8A] for long backup model	4A
Dry in Signal	[Disabled], [Remote on], [Remote off], [Forced bypass]	disabled
Dry out Signal	[load powered], [on bat], [Low bat], [bat open], [bypass], [ups ok]	bypass
Ambient temperature alarm (2)	[enabled], [disabled]	enabled
Battery remaining time	[enabled], [disabled]	enabled
Backup time limit	[enabled: 30min.~999min.], [disabled]	Standard: disabled ES: enabled 60 min.
Remote control	[enable], [disable]	disable
Date / Time	dd/mm/yyyy hh:mm	01/01/2020 00:00
LCD contrast	0 - 100%	50%

Note: if the UPS is used in IT neutral systems, the site wiring fault function should be disabled.

(1) The site wiring fault is detected only during the startup of the UPS.

(2) Temperature threshold 40°C.

4. COMMUNICATION

4.1. RS232 and USB

1. Communication cable to the serial or USB port on the computer.
2. Connect the other end of the communication cable to the RS232 or USB communication port on the UPS.

4.2. UPS remote control functions

• Remote Power Off (RPO)

When RPO is activated, the UPS will cut off output immediately, and continues to alarm.

RPO	COMMENTS
Connector type	1 mm^2 / 16 AWG Maximum wires
External breaker specification	60 V DC/30 V AC 20 mA max

• Dry in

The Dry in function can be configured (see Settings > Dry IN in section 3.6)

DRY IN	COMMENTS
Connector type	1 mm^2 / 16 AWG Maximum wires
External breaker specification	60 V DC/30 V AC 20 mA max

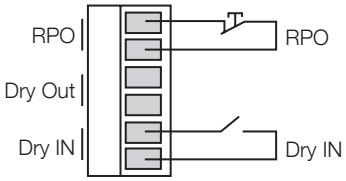

It is reccomanded the use of twisted and shielded cable, separated from the power cable.

• Dry out

The Dry out is a relay out and the dry out function can be configured (see Settings > Dry out in section 3.6)

DRY OUT	COMMENTS
Connector type	1mm² / 16 AWG Maximum wires
Inner Relay specification	24Vdc/1A

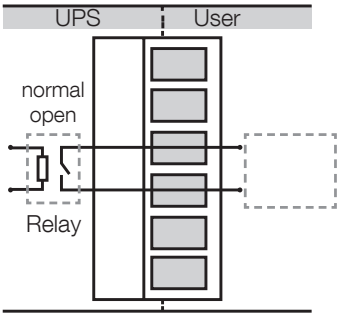

4.3. WEB/SNMP Card or Box (Option)

With this card installed, the UPS can be connected directly to a LAN (RJ45 ethernet) and controlled remotely from a WEB browser using TCP/IP protocol. Reference should be made to the relevant literature for a full description of functionality.

Note: enable the remote control to give the permission to the card to control the UPS.

4.4. Programmable Relay I/O Card (Option NRT4-OP-ADC)

This I/O relay card is a UPS management product with 5 relay output contacts for monitoring the status and 1 input contact as UPO, Battery Mode Shutdown, Any Mode Shutdown and Remote ON/OFF UPS.

Features:

• Monitor UPS events.

• 5 programmable relay output contacts.

• Configurable as normally open or normally closed for each relay contact.

• Input signal configurable as UPO, Battery Mode Shutdown, Any Mode Shutdown and Remote ON/OFF UPS.

• Can protect up to 5 computers.

5. INSTALLATION

5.1. Inspecting the equipment

If any part of the equipment has been damaged during shipment, keep the shipping cartons and packing materials for the carrier or place of purchase and file a claim for shipping damage.

5.2. Checking the accessory kit

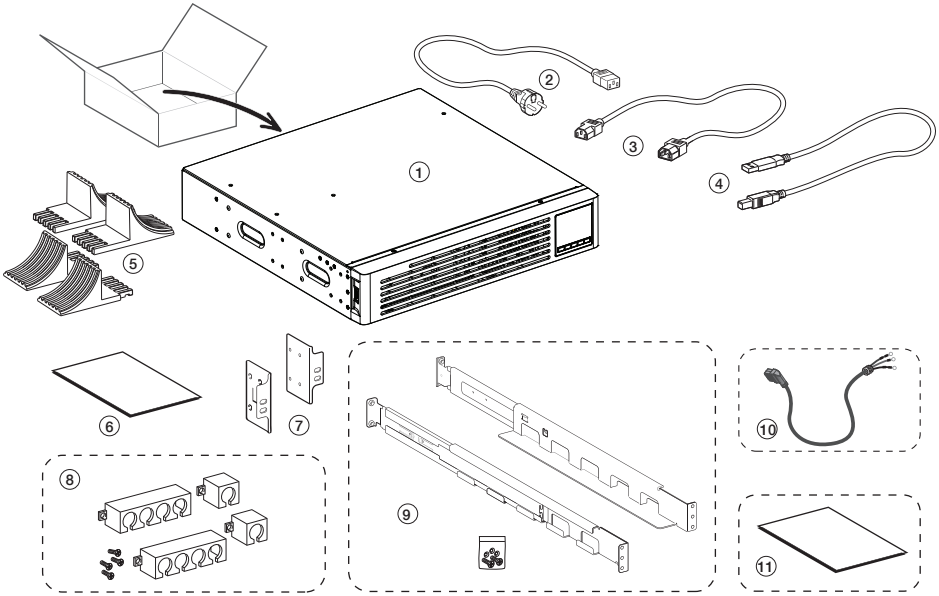

1. UPS
2. Input cable
3. Output cables (x2)*
4. USB cable
5. Tower stands
6. User manual (English)
7. Rack ears
8. Cable lockers
9. Rail kit
10. Battery cable - one side free (only for Long backup time version)
11. User manual (Multi-Language) (optional)

*more details in section 9.2

5.3. Installing the unit

Always keep 200 mm of free space behind the UPS rear panel.

Check that the indications on the name plate located on the top cover of the UPS complies with the AC-power source and the true electrical consumption of the total load.

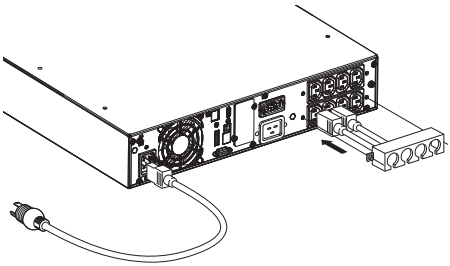

1. Connect the UPS input socket to the AC-power source using the cable of the protected equipment.
2. Connect the loads to the UPS using the cables listed in section 5.2, item 3.

Note: the UPS charges the battery as soon as it is connected to the AC-power source, even if the ON/OFF button is not pressed.

Once the UPS is connected to the AC-power source, 8 hours of charging are required before the battery can supply the rated backup time.

- Rack installation

Follow steps 1 to 4 for module mounting on the rails.

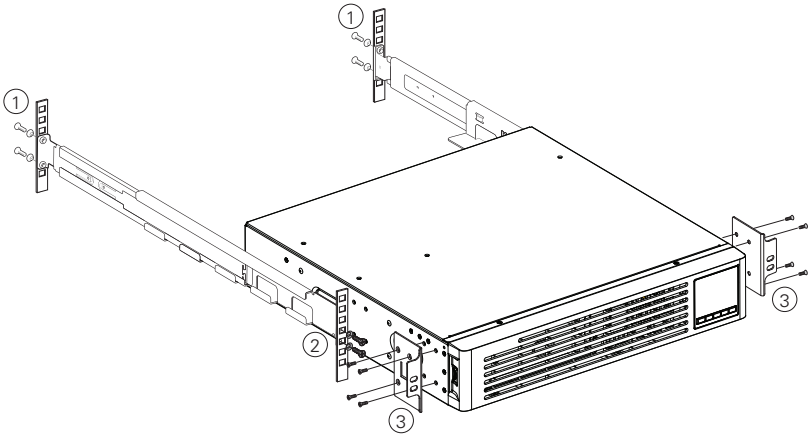

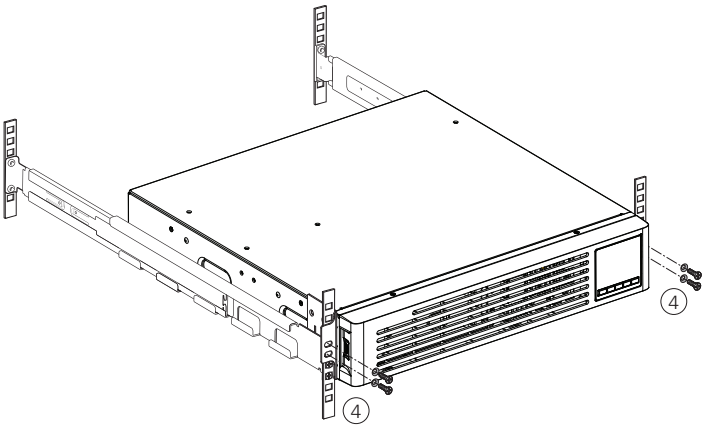

• Tower installation

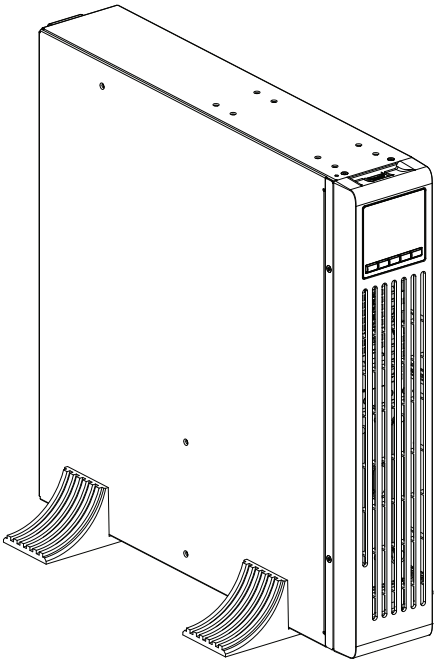

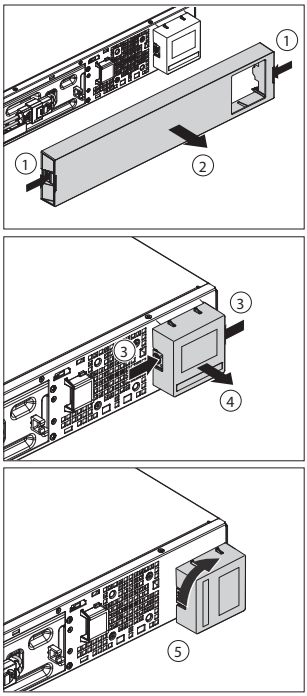

5.4. Connecting the EBM(s)

A small amount of arcing may occur when connecting an EBM to the UPS. This is normal and will not harm personnel.

These battery cabinets are part of a SOCOMEC UPS systems.
Be sure to use these battery cabinets only with the suitable SOCOMEC UPS.

5.4.1. Connecting to standard EBM

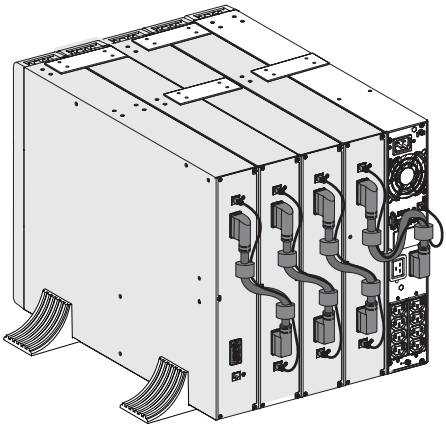

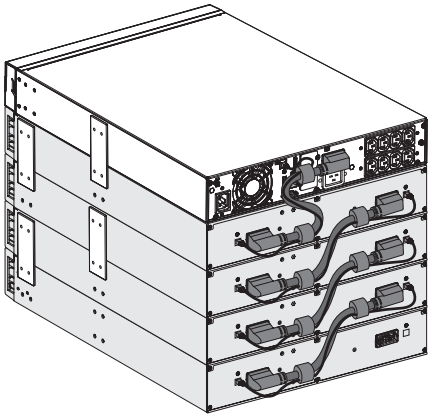

5.4.2. Connecting to other EBM

Caution! : Requires SERVICE PERSONNEL to install the EBM when using the EBM cable shown below.

6. OPERATION

Remove the display protective film

6.1. Starting the UPS using mains power

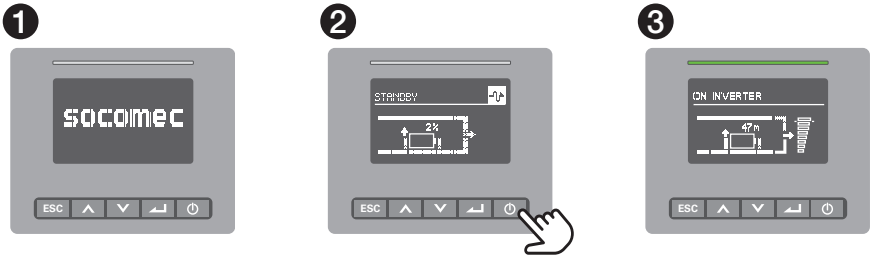

Plugged in power cord

3 sec

UPS in Normal mode

6.2. Starting the UPS using battery power

Before using this feature, the UPS must have been powered by mains power with output enabled at least once.

Battery start can be disabled. Refer to § “3.6. User settings - Cold start”.

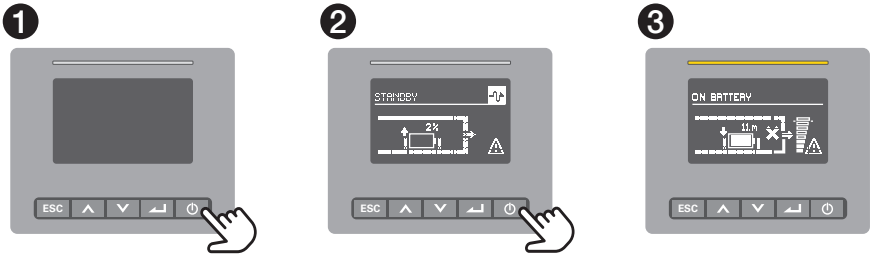

1 sec

3 sec

UPS in Battery mode

6.3. UPS shutdown

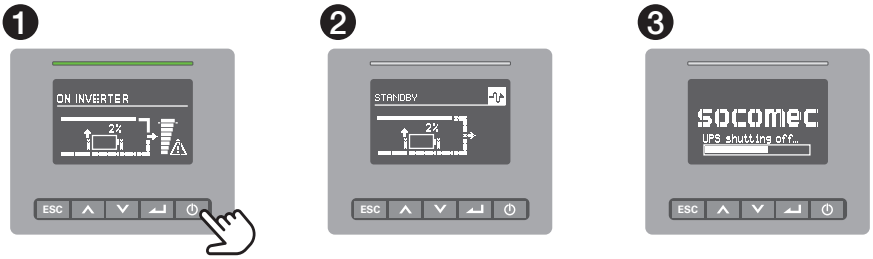

4 sec

Disconnect input cable,
UPS Shutting off

6.4. Operating mode

Line mode

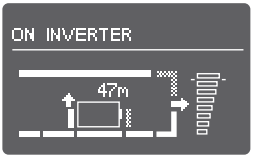

Battery mode

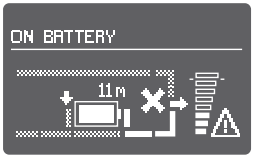

Bypass mode

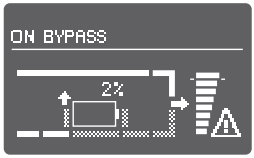

ECO mode

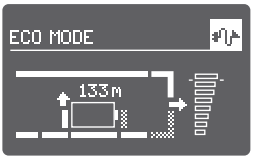

Standby mode

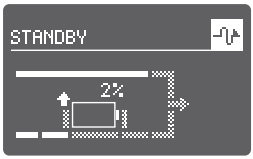

UPS OFF

7. UPS MAINTENANCE

7.1. Equipment care

For the best preventive maintenance, keep the area around the equipment clean and dust free. If the atmosphere is very dusty, clean the outside of the system with a vacuum cleaner.

For full battery life, keep the equipment at an ambient temperature of 25°C (77°F).

Note: the standard batteries are rated for a 3-5 year service life. The length of service life varies, depending on the frequency of usage and ambient temperature. Batteries used beyond expected service life will often have severely reduced runtimes. Replace batteries at least every 4 years to keep units running at peak efficiency.

7.2. Transporting the UPS

Note: please transport the UPS only in the original packaging. If the UPS requires any type of transportation, check that the UPS is disconnected and turned off.

7.3. Storing the equipment

If you store the equipment for a long period, recharge the battery every 6 months by connecting the UPS to the mains power supply. Wait until the batteries are fully charged (see Battery status on LCD).

If the batteries have not been charged over a six-month period, do not use them. Contact your service representative.

7.4. Replacing batteries

DO NOT DISCONNECT the batteries while the UPS is in Battery mode.

Consider all warnings, cautions, and notes before replacing batteries. Servicing should be performed by qualified service personnel with knowledgeable of batteries and required precautions. Keep unauthorized personnel away from batteries.

- Replacing the internal battery (For RT standard model)

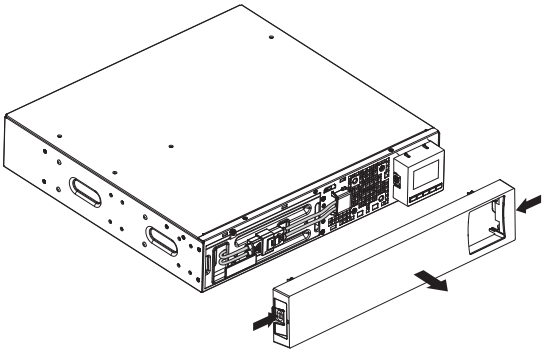

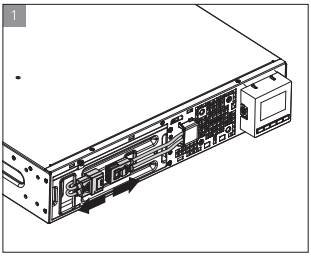

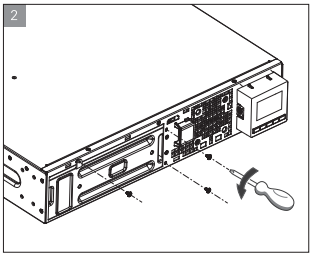

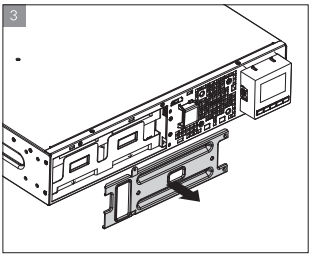

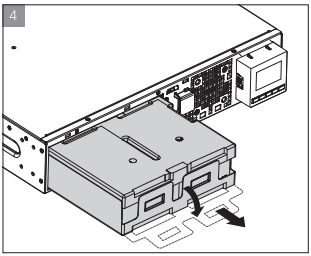

1. Put the new battery pack into the UPS.
2. Screw back the metal protection covers and the front panel.
3. Testing new batteries.

Verify that the replacement batteries have the same rating and brand as the batteries being replaced.

8. TROUBLESHOOTING

8.1. Typical alarms and faults

To check the UPS mode and History log:

1. Press any button on the front panel display to activate the menu options.
2. Press ↵ on the menu of “History log”.
3. Scroll through the listed events and faults.
4. Press ↵ on the menu of "UPS mode" for current alarms.

The following table describes typical conditions.

PROBLEM DISPLAYED	POSSIBLE CAUSE	ACTION
Battery mode (1 beep every 4 seconds)	A mains power failure has occurred, and the UPS is in Battery mode.	The UPS is powering the equipment with battery power. Prepare your equipment for shutdown.
Battery low (1 beep every seconds)	The UPS is in Battery mode and the battery is running low.	This warning is approximate, and the actual time to shutdown may vary significantly.
No battery (beep continuous)	The batteries are disconnected.	1. Verify that all batteries and detective cable (RJ50) are properly connected. 2. Check the LCD menu: Settings – External battery. If select the “Manual EBM” and Value is 0, please set the right value.
Battery fault (beep continuous)	The battery test has failed due to bad or disconnected batteries, or the battery minimum voltage is reached in Optimize Battery Management cycling mode.	Check that all batteries are properly connected. Start a new battery test: if the condition persists, contact your service representative.
The UPS does not provide the expected backup time.	The batteries need charging or service.	Apply mains power until the batteries are fully charged. If the condition persists, contact your service representative.
Bypass mode	An overload or a fault has occurred, or a command has been received and the UPS is in Bypass mode.	Equipment is powered but not protected by the UPS. Check for one of the following alarms: over-temperature, overload, UPS failure or forced bypass from dry in signal.
Power overload (1 beep every 0.5 seconds)	Power requirements exceed the UPS capacity (greater than 105% of nominal).	Remove some of the equipment from the UPS. The alarm resets when the condition becomes inactive.
Over-temperature warning (1 beep every seconds)	The UPS internal temperature is too high. At the warning level, the UPS generates the alarm but remains in the current operating state.	Clear vents and remove any heat sources. Ensure the airflow around the UPS is not restricted.
The UPS does not start	The input source is not connected correctly.	Check the input connections.
	The Remote Power Off (RPO) switch is active or the RPO connector is missing.	If the UPS Status menu displays the "Remote Power Off" notice, deactivate the RPO input.
Emergency power off	RPO is active	1) Check the RPO connector status. 2) Reset the RPO fault through LCD. Main menu – Control - Reset fault state.
Fan fault	Fan abnormal	Check if the fan is running normally
Site fault Input bad wiring	Phase and neutral conductor at input of UPS system are reversed	Site Fault detection disabled by default. It can still be enabled / disabled from the LCD settings menu. Reconnect all input wires.
Over-temperature fault	Over-temperature is too high, UPS goes to bypass or stopped.	Check the ventilation of the UPS and check the ambient temperature.
Output short circuit	Output short circuit occurred	Check the output of UPS and loads, make sure the short circuit is removed before turning on again.

9. SPECIFICATIONS

9.1. UPS block diagram

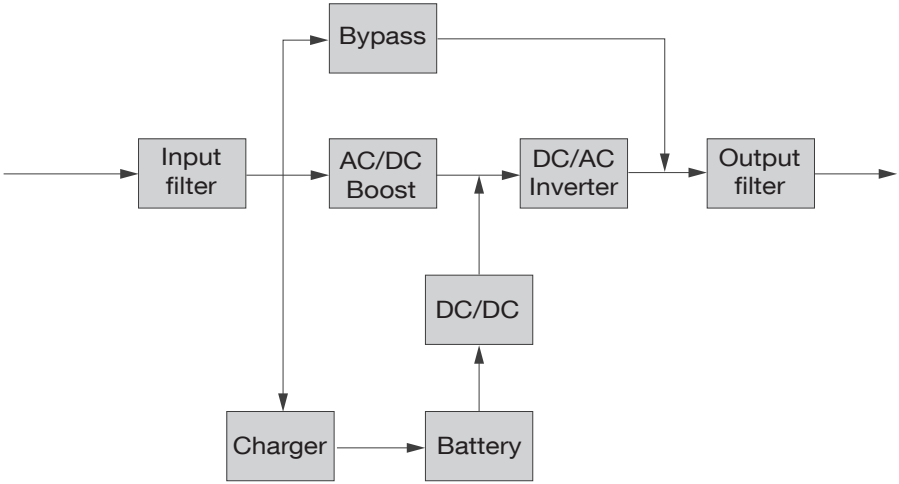

9.2. UPS specifications

Model name		NRT4-U010B..	NRT4-U015B..	NRT4-U015LB..	NRT4-U020B..	NRT4-U030B..	NRT4-U030LB..
Power rating	VA/Watt	1000 VA/1000 W	1500 VA/1500 W		2000 VA/2000 W	3000 VA/3000 W	
Input performance	Voltage range	160-300 V 100% load, 110-160 V derating to 50% load linearly					
	Rated frequency	50 Hz/60 Hz					
	Frequency range	40 Hz-70 Hz (45 Hz-55 Hz, 54 Hz-66 Hz @ load > 60%)					
	PF	> 0.99					
	THDI	< 5%					
Input connection	Socket	1x IEC C14			1x IEC C20		
	Cables	German 3-Pin Straight AC plug to IEC 320 C13, H05VV-F 3G 0.75 mm²			German 3-Pin Straight AC plug to IEC 320 C19, H05VV-F 3G 1.5 mm²		
Output performance	Rated voltage	200/208/220/230/240 VAC (derating 10% at 208 V, derating 20% at 200 V)					
	Rated frequency	50 Hz/60 Hz					
	Maximum PF	PF = 1					
	Voltage accuracy	±1%					
	THDv	< 1% linear load; < 5% nonlinear load					
	Transfer time	0 ms@line <-> battery; 4 ms @ line <-> bypass; 10 ms @ ECO <->Inverter					
	Crest Ratio	Max 3:1					
	Overload	100% < load ≤ 105% continuous. 105% < load ≤ 125% for 5 minutes 125% < load ≤ 150% for 30 seconds. > 150% for 500 ms.					
Output connection	Socket	1 main outlet group (with 4 x IEC C13) 1 programmable outlet group (with 4 x IEC C13)				1 main outlet group (with 1 x IEC C19 + 4 x IEC C13) 1 programmable outlet group (with 4 x IEC C13)	
	Cables	IEC 320 C14 to IEC 320 C13, H05VV-F 3G 0.75 mm²				IEC 320 C20 to IEC 320 C19, H05VV-F 3G 1.5 mm² IEC 320 C14 to IEC 320 C13, H05VV-F 3G 0.75 mm²	
	Load segment control	Yes, 1 programmable load segment control					
Short-circuit current (RMS) /protect time	Bypass mode	550 A/2.8 ms	550 A/2.8 ms		699 A/7 ms	699 A/7 ms	
	Normal/Battery mode	20 A/100 ms	25 A/100 ms		36 A/100 ms	54 A/100 ms	
Battery	Voltage	36 VDC	36 VDC	36 VDC	72 VDC	72 VDC	72V DC
	Capacity (AH)	3 x 12 V 9 Ah	3 x 12 V 9Ah	NA	6 x 12 V 9Ah	6 x 12 V 9Ah	NA
EBM auto detection		Yes					
Battery Hot swappable		Yes					

Model name		NRT4-U010B..	NRT4-U015B..	NRT4-U015LB..	NRT4-U020B..	NRT4-U030B..	NRT4-U030LB..
Charger	Charging method	Optimize Battery Management (OBM)					
	Charging current	1.5 A	1.5 A	8 A	1.5 A	1.5 A	8 A
	Recharging time	3h to 90%	3h to 90%	NA	3h to 90%	3h to 90%	NA
Other mode	CVCF	Yes (derating to 60% load)					
HMI	Display	Dot matrix LCD					
	Language	Multi-Language					
	USB	USB 2.0 Ready to LocalView connection					
	RS232	Yes (DB9) Ready to LocalView connection					
	Dry in/out	1 programmable dry in; 1 programmable dry out					
	RPO	Yes					
	Intelligent slot	Yes (for Socomec cards)					
	Network card	Optional, NetVision card					
	Dry contactor card	Optional, NRT4-OP-ADC					
	Monitor software	LocalView					
Physical performance	Dimension (W*D*H) mm	438*445*85.5(2U)			438*600*85.5(2U)		
	IP protection level	IP20					
Environment	Operating temperature	0 ÷ 45 °C, 40 ÷ 45 °C derating to 80%					
	Relative Humidity	0-95%					
	Operating Altitude	0~3000 m (the load derating 1 % every up 100 m @1000~3000 m)					
	Acoustic Noise	< 45 dB at front 1 m			< 50 dB at front 1 m		
Certification		CE, IEC/EN 62040-1 , AS 62040.1					
EMC		EN IEC 62040-2 , AS IEC 62040.2					
Accessory	Input power cable	Yes					
	Output power cable	Yes (For IEC models)					
	EBM cable	Yes (in EBM)					
	USB cable	Yes					
	Rail kit	Yes, 80 kg max load.					
	Tower Feet	Yes					
	Rack ear	Yes					
	Manual (English)	Yes					

China RoHS

产品中有害物质的名称及含量

Name and content of hazardous substances in products

部件名称 COMPONENT NAME	有害物质 HAZARDOUS SUBSTANCE					
	铅 (Pb) LEAD (Pb)	汞 (Hg) MERCURY (Hg)	镉 (Cd) CADMIUM (Cd)	六价铬 (Cr (VI)) HEXAVALENT CHROMIUM (Cr (VI))	多溴联苯 (PBB) POLYBROMINATED BIPHENYLS (PBB)	多溴二苯醚 (PBDE) POLYBROMINATED DIPHENYL ETHERS (PBDE)
电池类 BATTERY	×	O	O	O	O	O
印刷电路组件 PCBA	×	O	O	O	O	O
电源线插座端子 WIRE TERMINAL	×	O	O	O	O	O
箱体五金类 HARDWARE	×	O	O	O	O	O
开关/断路器类 SWITCH, BREAKER, ETC.	O	O	×	O	O	O

本表格依据 SJ/T 11364 的规定编制。

O：表示该有害物质在该部件所有均质材料中的含量均在GB/T 26572规定的限量要求以下。

×：表示该有害物质至少在该部件的某一均质材料中的含量超出GB/T 26572规定的限量要求。

环保使用期限的免责条款：环保使用期限规定的具体期限仅为符合中华人民共和国的相应的法律规定，并非代表我司向客户提供保证或负有任何义务。环保使用期限中假定客户按照操作手册在正常情况下使用本产品。对于本产品中配备的某些组合件（例如，装有电池的组合件）的环保使用期限，可能低于本产品的环保使用期限。

This table was drawn up according to the provisions of SJ/T 11364.

O: The content of these hazardous substances in all homogeneous materials of these components is below the limit required by the directive GB/T 26572.

×: The content of these hazardous substances in certain homogeneous materials of these components is higher than the limit required by the directive GB/T 26572.

Environmental Protection Use Period (EPUP) Disclaimer: The number provided as the EPUP is provided solely to comply with applicable laws of the People's Republic of China. It does not create any warranties or liabilities on behalf of our company to customers. The EPUP assumes that the product will be used under normal conditions in accordance with the operating manual. Certain assemblies inside this product (for example, assemblies that contain a battery) may have an EPUP which is lower than the EPUP on this product.

MAIN OFFICE, CONTACT:
SOCOMEC SAS
1-4 RUE DE WESTHOUSE
67235 BENFELD, FRANCE

552893A-EN 06.2024

www.socomec.com

Non contractual document. © 2024, Socomec SAS. All rights reserved.

552893A

socomec
Innovative Power Solutions